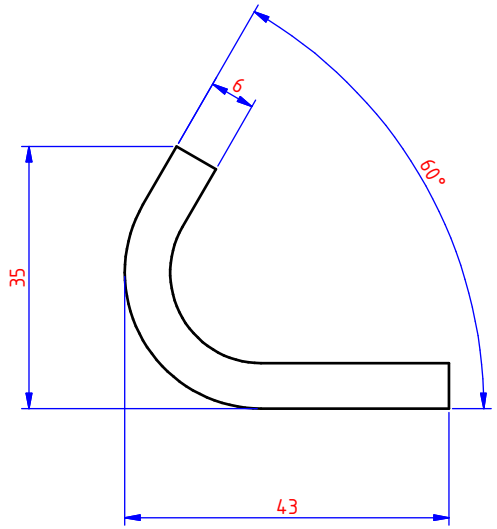

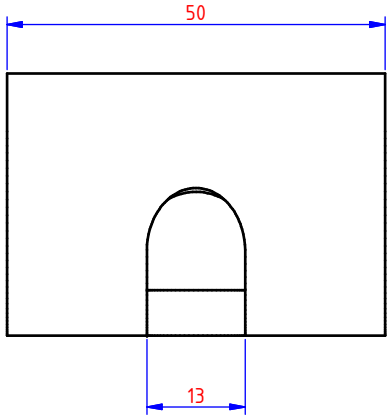

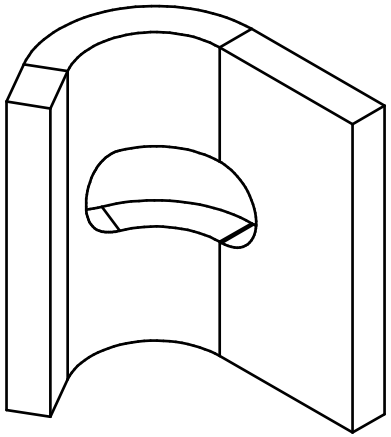

NOT FOR PRODUCTION

Remarks :
Clamping range 0 - 20 mm
SWL : 20 kN
Max. torque with bolt and washer M12- 8.8 : 85Nm

Treatment : hot-dip galvanised

Number	Edition	Description of the modification	Date	Visum
1	A	max torque added - without PCS	16/02/2015	

Ref.	HDVS41.--	Name			
Drawn	aelvoelu	Montage stuk VS41.46 [HDVS41.46]			
Date	31/07/2012				
Material:	Tolerance:	Standard:	I.S.O. SYMBOL		
1.0037 (Hot-dip)	-				

VERGOKAN
Meersbloem Melden 16
9700 Oudenaarde
Tel: 055/31.83.35
Fax: 055/31.43.88

Scale: 1 : 1	Adapt drawing exclusively with CAD	MONT
DRAWING NUMBER 45808	FORM A4	P. 2 / 2 P.