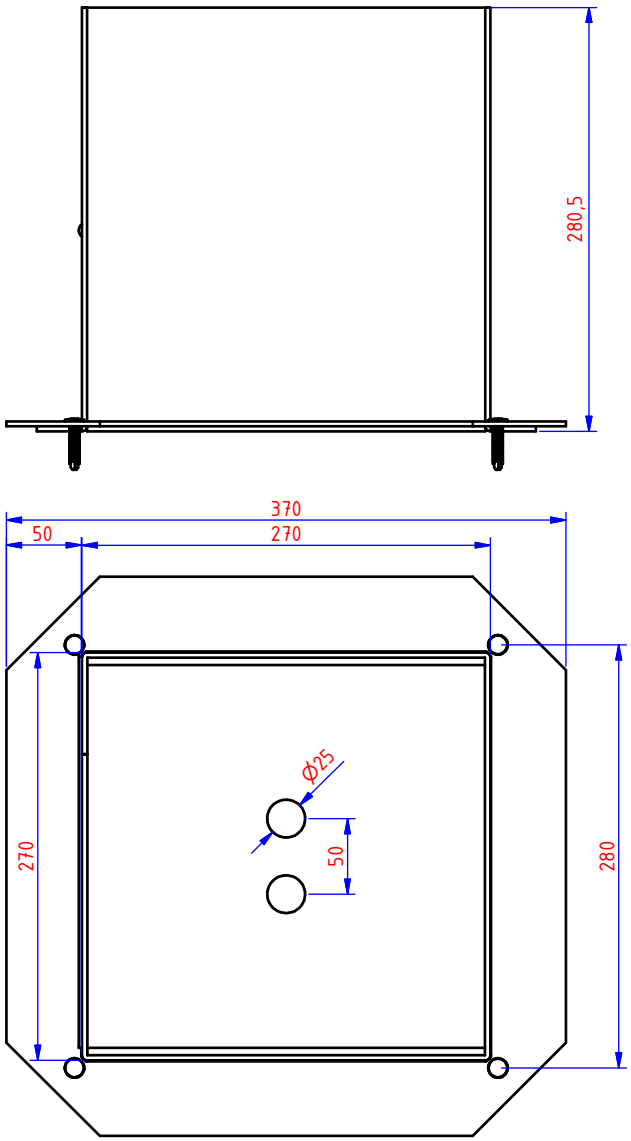

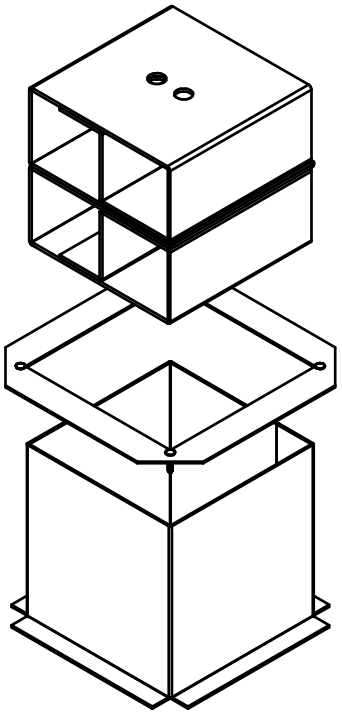

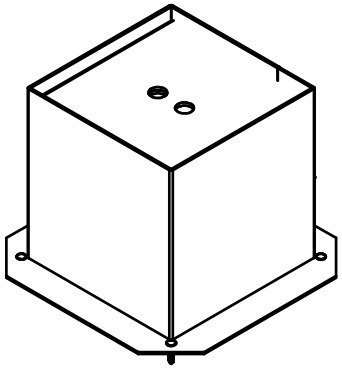

NOT FOR PRODUCTION

X.X = Inspection Dimension

Number	Edition	Description of the modification	Date	By
1	A	Materiaal aangepast (450gr naar 600gr)	24/02/2015	sc

Ref.	VEVV3	Name			
Drawn	colpaest	Vormelement vouwbaar V 3 [VEVV3]			
Date	4/08/2014				
Material:	Tolerance:	Standard:	I.S.O. SYMBOL		
-	ISO 2768-1 (see table)				

VERGOKAN
Meersbloem Melden 16
9700 Oudenaarde
Tel: 055/31.83.35
Fax: 055/31.43.88

Scale: 1 : 5	Adapt drawing exclusively with CAD		VLOER
DRAWING NUMBER 46016		FORM A4	P. 1 / 3 P.