item	qty	drawing	reference	description
4	1	45324	[RBK6.20]	Carriage bolt
3	1	45472	[RM6]	Flange nut
2	1	45197	[VFKK25]	Joining clamp for VF(L) - Small
1	1	45196	[VFKG30]	Joining clamp for VF(L) - Big

Parts list

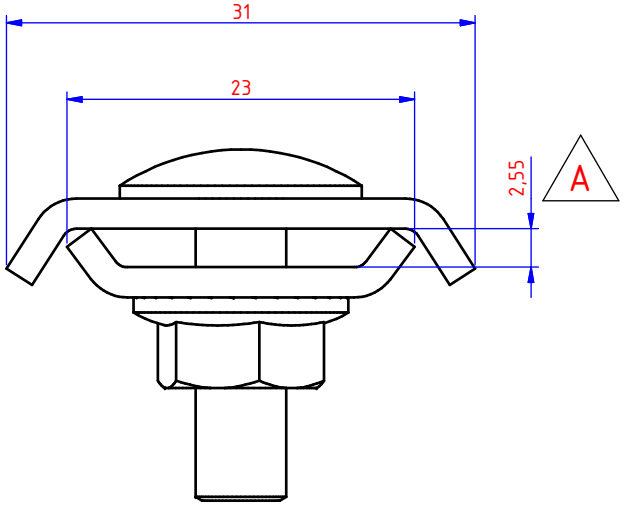

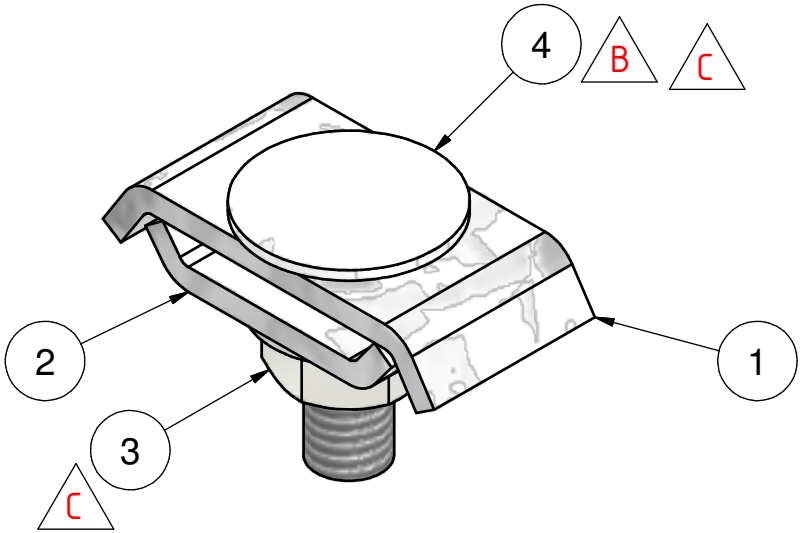

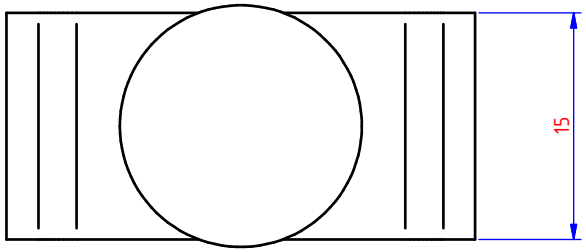

Material thickness: 2,00mm

NOT FOR PRODUCTION

Number	Edition	Description of the modification	Date	By
	C	Zie WF HD bouten en moeren 22 okt 2009	17/11/2009	
	B	RB 6*20 vervangen door RBK 6*20	24/01/2007	
3	A	Tussenafstand VFKK en VFKG kleiner (2,55mm) geworden	11/01/2005	

Ref.	VFK	Name	Scale:	Adapt drawing exclusively with CAD	
Drawn	coppenku	Joining clamp for VF(L) [VFK]	2 : 1		DRAAD
Date	24/06/1998				
Material:	Tolerance:	Standard:	I.S.O. SYMBOL	DRAWING NUMBER	FORM
1.0226 (DX51 Pregalva.)	-	-		44176	A4

VERGOKAN
Meersbloem Melden 16
9700 Oudenaarde
Tel: 055/31.83.35
Fax: 055/31.43.88